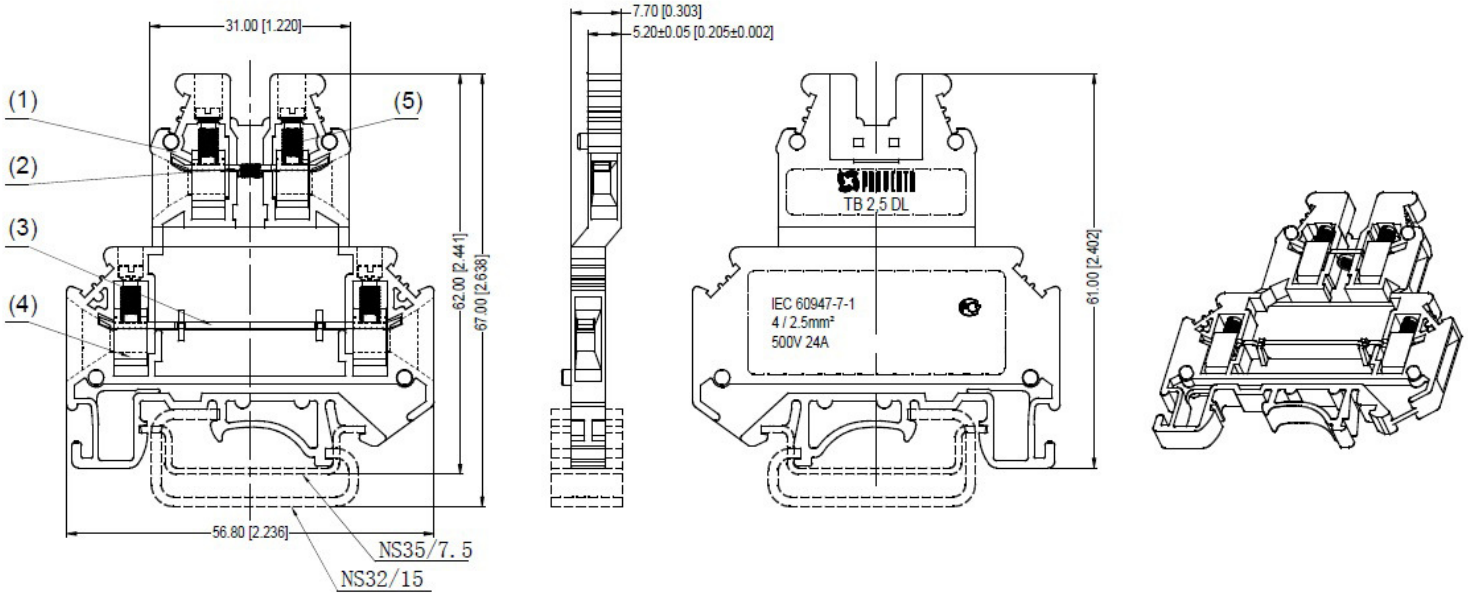
31.00 [1.220]
(1)
(2)
(3)
(4)
(5)
62.00 [2.441]
67.00 [2.638]
56.80 [2.236]
NS35/7.5
NS32/15
7.70 [0.303]
5.20±0.05 [0.205±0.002]
TB 2.5 DL
IEC 60947-7-1
4 / 2.5mm²
500V 24A
61.00 [2.402]